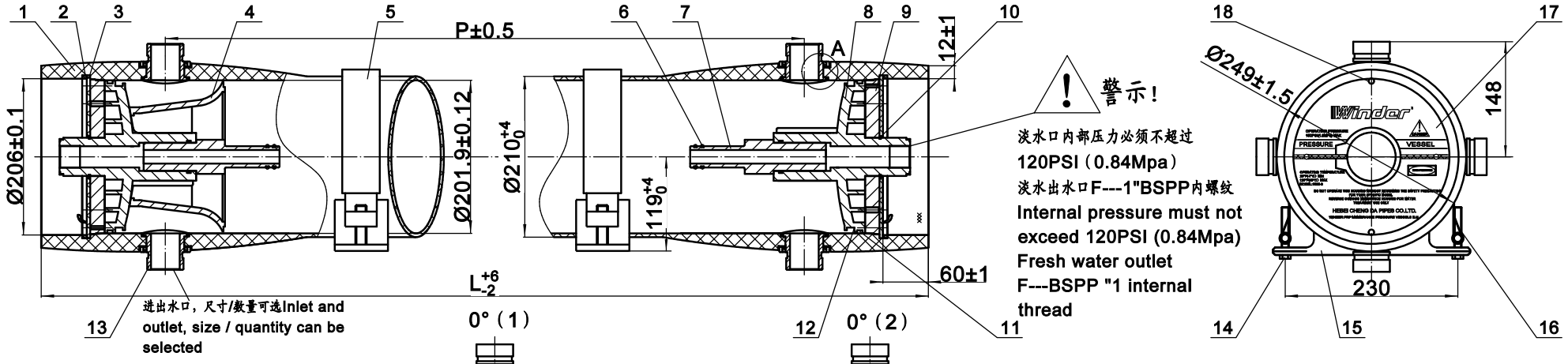

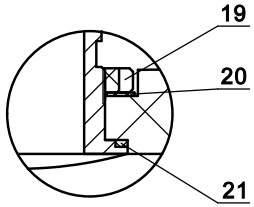

A-放大：3:1

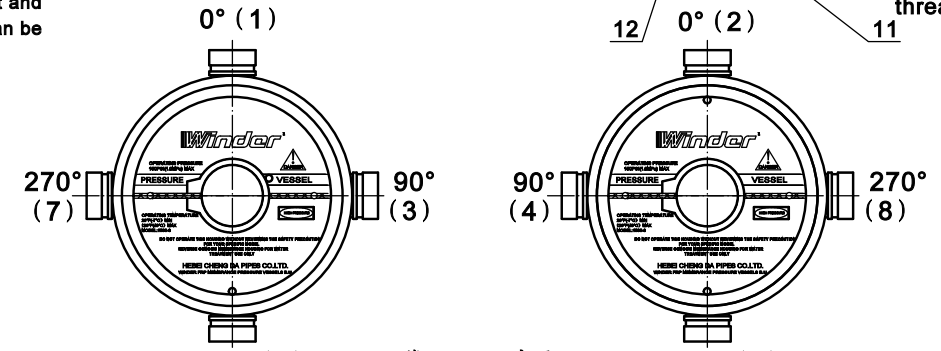

管口方位示意图
PORTS POSITION

水压测试 Hydrostatic leakage test	试验压力为设计压力的1.1倍，采样率：100% The test pressure is 1.1 times the design pressure, and the sampling rate is 100%.
巴氏硬度Barcol hardenss test	RT-440
重量Vessel weight test	RT-430
厚度Thickness check	RT-420
检验Test	方法METHOD
介质名称 Media name	水 Water
PH 值 PH value	3-11
设计压力 Design pressure	150PSI
最低允许温度 Minimum allowable temperature	20°F(-7℃)
最高允许温度 Maximum allowable temperature	120°F(49℃)

长度编码 Length Code	L Inch (mm)	P Inch (mm)	重量 WEIGHT lb (kg)
1	59.17 (1503)	47 (1194)	50.6 (23)
2	99.17 (2519)	87 (2210)	63.8 (29)
3	139.17 (3535)	127 (3226)	77 (35)
4	179.17 (4551)	167 (4242)	90.2 (41)
5	219.17 (5567)	207 (5258)	103.4 (47)
6	259.17 (6583)	247 (6274)	116.6 (53)
7	299.17 (7599)	287 (7290)	129.8 (59)
8	339.17 (8615)	327 (8306)	143 (65)

序号	名称	数量	材料
21	侧口密封圈SIDE PORT SEAL RING	2	EPDM 512
20	侧口垫片SIDE PORT GASKET	2	SA-479M F316L
19	侧口螺母SIDE PORT NUT	2	SA-479M F316L
18	紧固螺丝SCREW	4	SA-193
17	承载板标签LOGO LABLE	2	不干胶标签ADHENSIVE LABLE
16	钢带STRAP	2/3	A-666,304
15	鞍座SADDLE	2/3	TPU(S60D)
14	钢带螺母STRAP NUT	4/6	SA-479M F316L
13	侧口SIDE PORT	2	SA-182M F316L
12	承压头V型圈HEAD SEAL T RING	2	EPDM 512
11	承压头O型圈HEAD SEAL O RING	2	EPDM 512
10	卡圈PERMEATE RETAINING RING	2	SA-479M F316L
9	承载板BEARING PLATE	2	SB-209,6061-T651
8	承压头(150Psi)HEAD SEAL	2	PF062-3
7	适配器ADAPTOR	2	ABS CHIMEI 757K
6	适配器O型圈ADAPTOR O RING	4	EPDM 512
5	钢带护套STRAP PROTE CTIVE JACKET	2/3	软质PVC SOFTY PVC
4	止推环THRUST CONE	1	PF062-3
3	三圈 RETAINER RING	2	SA-479M F316L
2	嵌入钢圈EMBEDDED RING	2	SA-312,TP316L
1	壳体SHELL	1	FIBER GLASS +EPOXY

SIGNATURE

	NAME	DATE
DESIGN		
REVIEW		

THIS DRAWING CAN NOT BE USED WITHOUT PRIOR WRITTEN APPROVAL OF OUR COMPANY

Winder 河北成达管业有限公司
HEBEI CHENG DA PIPES CO.,LTD

比例 SCALE	材料 MATERIAL	型号 TYPE W80S150
数量 QUANTITY	光洁度 SMOOTH	描述 DESCRIPTION MEMBRANE HOUSING
投影 PROJ	电脑编号 NO.	图号 DRAWING NO. CD-Z-00

DO NOT MEASURE THE DIMENSIONS. 单位UNIT:MM